Sublette County Planning & Zoning Office/Sanitarian
Sanitarian Phone 367-2754 PZ Office 367-4375
PO Box 506, Pinedale, WY 82941

SUBLETTE COUNTY WASTEWATER SYSTEM APPLICATION

Property Owner_____ Phone # Res _____ Work_____

Mailing Address_____City_____ State _____ Zip_____

Septic System Installer_____ Phone _____

Property Information:
Legal Description: Subdivision_____ Lot # _____
Metes & Bounds:_____ Section _____Township_____ Range_____
Road Name _____ Acreage _____ Type of Building _____
Bedrooms _____ # Bathrooms _____ Basement Drain or Toilet? _yes/no_

Soil Information:
Percolation (Minutes to drop 1 inch) _____ Conducted by_____ Date _____
Depth of Highest Seasonal Groundwater _____ Date of Test _____
Ground Slope/Grade _____ % or_____ _____ Feet Drop per 100 Feet

Soil Type:
_____Coarse sandy pit run _____Loam to sandy clay loam
_____Fine to sandy loam _____Clay loam to silty loam
_____Sandy loam to loam _____Other:_____

** THE SEPTIC SYSTEM MUST BE INSPECTED BY THE COUNTY SANITARIAN BEFORE BACKFILLING **

The undersigned acknowledges that the above information is true and correct and that false information will negate and invalidate the application and/or the subsequent permit. I agree to comply with all County regulations and State laws relating to the subject matter of this application and hereby authorize representatives of the County to enter upon the above-mentioned property for inspection and compliance purposes.

Owners (or Agent) **signature** _____ **Date** _____

The County Sanitarian or Planning & Zoning personnel shall assume no responsibility in the case of failure or miss-placement of a sewage disposal system, beyond consulting in good faith with the property owner or representative.

Proposed Septic System Information (Normal System)
Septic System Installer _____Phone # _____
Proposed Septic Tank (Minimum 1000 gallons for house up to 4 bedrooms; 1250-1500 gallons for larger houses)
Liquid Capacity _____ Manufacturer _____Material_____
Proposed Leach Field
Infiltrators: __yes/no__ Infiltrator model?_____ Gravel & Pipe:__yes/no__Other:_____.

Low, wet, or irrigated areas may preclude septic installation. Contact Sanitarian in this situation.

Owner_____**Subdivision**_____**Lot**_____**Road**_____

SEPTIC SITE SOIL TESTS

Groundwater Depth Test This test must be performed in all areas where groundwater is thought to be close to the surface. (If in doubt, do this test!) TEST MUST BE DONE WHEN GROUNDWATER IS AT THE HIGHEST! (Wyo D.E.Q. rule), usually June 10 to July 30. Dig an 8'-10'ft hole with backhoe. Water, if found, will fill in to the level of the ground water within 30 minutes. Measure depth of groundwater from original soil surface. Groundwater depth of 6'ft or deeper from original soil surface generally indicates a standard septic system can be used. Groundwater depth of 2' to 5' below soil surface generally indicates a pumped/raised mound system will be used. Groundwater depth of less than 2' from original soil surface generally indicates that NO conventional septic system is approved for this site. Contact County Sanitarian in this case.

***NOTE**: If while digging this hole, a change in soil character is noticed, i.e. increase or decrease in clay, sand, or appearance of a new soil layer (especially clay), draw depth and type of soil on back of page. DO NOT USE THIS HOLE AS A PERCOLATION HOLE. FILL IN IMMEDIATTELY TO REMOVE DANGER OF A DEEP, OPEN HOLE.

Depth to groundwater from soil surface _____Owner/Agent Signature_____Date_____

Percolation Test (this test can be done any time of year except extreme freezing conditions)

1.) The percolation test holes shall be spaced uniformly over the proposed leach field site. A minimum of three percolation test holes are required. Dig or bore an 8" to 14" diameter hole down 3'- 4'ft deep. The walls should be vertical. Scrape the walls and bottom of the hole with a sharp hand tool to expose the natural soil surface. Remove all loose material from the hole. Coarse sand or gravel shall be placed in the bottom of the hole to prevent the soil from scouring and sealing. (See diagram on last page of this packet.)

2.) Presoaking. The purpose of presoaking is to have the water conditions in the soil reach the same condition similar to that which exists during continual wastewater soaking. The minimum time of presoaking varies with soil type but must be sufficiently long so that the water seeps away at a constant rate. Follow these instructions:

a) In sandy or gravely soils, place 16" to 24" of water in the hole and allow it to seep away. Repeat a second time. If, on the third fill, the water all seeps away in ten minutes or less, move on to step 3.

b) In other soils where water remains after ten minutes, additional presoaking is required. In this case, allow the water to soak in the hole, at 16" to 24" inch level, for 4 hours or overnight if possible. This will allow the soil to swell and saturated before measurements are taken. Move on to step 3.

3.) Percolation Rate Measurement. Insert a yardstick or metal tape into the perc hole. The tape does not need to line up with any point or elevation, but does need to be affixed so that it does not move while water is poured in. Slowly pour water into hole to 16" to 24" above gravel. **Time the water drop in minutes so that it is known how many minutes it takes the water to drop one (1) inch.** If the timing ends up with a water drop of more or less than 1 inch, this is okay. Write the information in the Perc Test Chart (minutes **:** seconds ,over, inches and fraction of inch water dropped). Repeat the test in the same hole, starting with 12" to 18" again. Fill hole and repeat tests until timing is about the same for three consecutive readings. This process is to be done with all holes.

PERCOLATION TEST CHART

	Test fill 1	Test fill 2	Test fill 3	Test fill 4	Test fill 5	Test fill 6
Hole 1	Min_____:_____ Inches_____	Min_____:_____ Inches_____	Min_____:_____ Inches_____	Min_____:_____ Inches_____	Min_____:_____ Inches_____	Min_____:____ Inches_____
Hole 2	Min_____:_____ Inches_____	Min_____:_____ Inches_____	Min_____:_____ Inches_____	Min_____:_____ Inches_____	Min_____:_____ Inches_____	Min_____:____ Inches_____
Hole 3	Min_____:_____ Inches_____	Min_____:_____ Inches_____	Min_____:_____ Inches_____	Min_____:_____ Inches_____	Min_____:_____ Inches_____	Min_____:____ Inches_____

It is extremely important that the above tests are done accurately. THE UNDERSIGNED ACKNOWLEGES THAT ABOVE INFO IS TRUE AND CORRECT and THAT FALSE INFORMATION MAY INVALIDATE THE APPLICATION and/or SUBSEQUENT PERMIT.

Owners or Agent Signature_____**Date**_____

SITE SELECTION INFORMATION FOR SEPTIC SYSTEMS

Before planning your septic system, become familiar with the health regulations in the County, permit and inspection requirements, and the penalties that may be imposed for violations. In selecting a site for the leach field, (percolation test hole sites) keep in mind the following;

Drinking wells and springs should be located up slope from planned septic systems and at a distance of at least 100 ft from proposed leach field. It is usually best to locate well and leach field on opposite sides of the house.

Soil permeability should be moderate to rapid, and the soil percolation rate should be at least one (1) inch per hour. This will be determined by the percolation test, which will be run. Try to locate leach field in better perc. soils.

Do not locate tank or field beneath buildings, parking lots, roadways, horse or feed areas or other compacted areas.

Groundwater level, during the wettest season, shall be at least four (4) feet below the bottom of the trenches, or bottom of infiltrators. This is determined by a groundwater/soil profile hole dug to 8 feet.

Rock formations or other impervious layers (clay) shall be more than four (4) feet below the bottom of the trenches. Usually this is eight (8) feet from ground surface to the impervious layer.

Do not select a site for a leach field that is within (100 – 50) feet of a stream or other body of water or ditch and never install a septic system on a flood plain. All property lines shall be at least ten (10) feet from septic systems.

Trenches and beds are difficult to lay out and construct on slopes steeper than 15 percent. If steep, shallow soils that are underlain by solid rock or impervious soil are used as leach field site, the septic tank effluent is likely to seep to the surface down slope. Contact the County Sanitarian about systems on steep slopes.

Do not schedule septic installation during winter months. Soil and groundwater tests cannot be properly performed. D.E.Q. regulations state that septic tanks and leach systems cannot be installed upon frozen soils.

An area shall be designated on the plans for future installation of a replacement leach field for use if current field fails.

Septic tanks must be Wyoming D.E.Q. approved. Minimum size is 1000 gallons for houses up to 4 bedrooms. Add 250 gallons per bedroom after that. Two compartment tanks work best for long system life.

CONSTRUCTION DISTANCES TO BE OBSERVED

SEPTIC TANKS shall have the following minimum distances:

*5 ft from dwelling
*50 ft from any water well (including neighbor's)
*50 ft from waterways
*25 ft from water lines under pressure
*10 ft from property lines

DISPOSAL /LEACH FIELDS shall meet the following minimum distances:

*100 ft from any water well (including neighbor's)
*100 ft from any waterway (may be closer, 50'-75'ft, in soils that perc slower than 5 minutes per inch)
*25 ft from drinking water lines
*10 ft from dwelling or building
*10 ft from septic tank
*10 ft from property lines

WATER WELLS shall meet the following minimum distances:

*50 ft from any waterway
*10 ft from property lines

REMINDER !
System must be inspected by sanitarian before backfill.

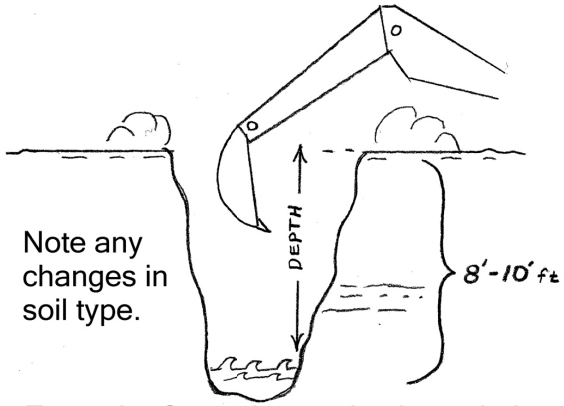

Example; Groundwater depth test hole.
DO NOT use for perc hole!
Fill in immediately!

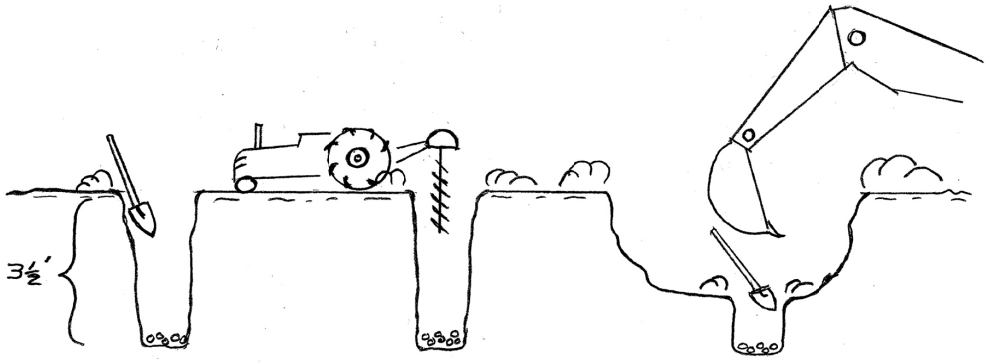

3 Examples of percolation test holes.

Below are simple diagrams of a normal septic with infiltrators.(you may still use gravel/pipe fields) THERE MAY BE VARIATIONS, CHECK WITH SANITARIAN ABOUT YOUR DESIGN IDEAS!
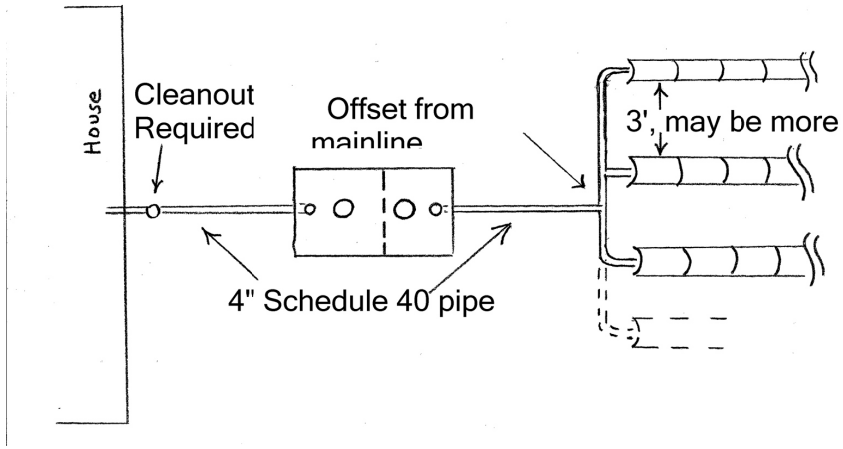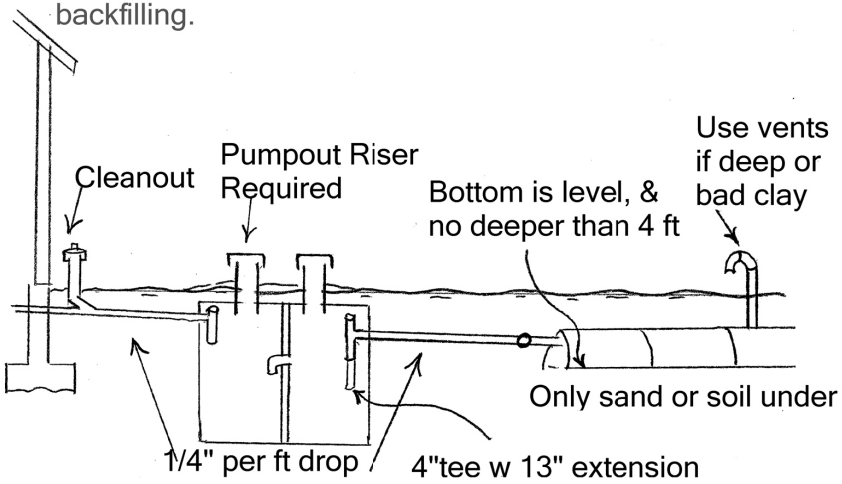
IMPORTANT POINTS; Do not have field at basement depth. Keep tank near house and extend away field if needed. Do not locate any part of septic under drive/parking areas, horse or feed areas. Fill plastic tanks with water before backfilling.